LPT40 DSD

4,000 LB. CAPACITY

LITHIUM-ION PALLET TRUCK FOR DIRECT STORE DELIVERY

SPECIFICATIONS

ELIMINATE WASTE. REDUCE LABOR. STREAMLINE DELIVERY.

The LPT40 Direct Store Delivery is a solution to beverage delivery that solves the problem of long turnaround times for delivery drivers. An integrated weigh scale allows drivers to cross-check order accuracy without pulling apart loads. This system is built on an integrated Lithium-ion platform with a compact footprint, high performance and simplicity that supports the delivery driver’s effectiveness.

FEATURES

Integrated Load Scale

Thanks to the integrated scale, mobile weighing can be done almost anywhere, at any time. The scale boasts accuracy and ease of use, utilizing four load cells built into the forks. Weighing loads allows delivery associates to cross-check with customers and eliminate the need to break down pallets when making deliveries. This system can save both time and energy.

Reduce Operator Fatigue

When delivery can be completed by cross-checking weight instead of breaking down a pallet to check each individual item, the operator can save significant effort from bending and lifting. This can also help reduce the likelihood of work-related injuries from repetitive lifting, often in awkward positions and tight spaces. An included load securement strap can help restrain tall, heavy loads from tipping over.

Powerful for Smooth Operation on Ramps

The strong traction motor enables the truck to climb ramps, even when loaded, under its own power. This power also helps when descending ramps, reducing or eliminating the need for the operator to tug on the truck to control speed. The electromagnetic parking brake also allows the truck to stop and hold on a grade. A grooved drive tire helps improve traction on wet surfaces.

FEATURES

Navigate Tight Spaces

LPT40 DSD's narrow footprint makes passing through narrow doorways at convenience stores easy. Turtle mode can be toggled on and off, enabling the truck to maneuver through tight aisles and make sharp turns while the control handle is raised.

A Tough Truck for Tough Work

Delivery can be a demanding and abusive application for pallet trucks, and LPT40 DSD is built to last. Its chassis is equipped with stability casters and heavy-gauge steel forks and is designed to be water resistant for when the weather gets rough. To handle the bumps and vibrations of a delivery truck, LPT40 DSD has been beefed up with improved fasteners and assembly techniques to provide reliability.

Flexible Charging

LPT40 DSD is equipped with an onboard battery charger that allows recharging by plugging into a 120V wall outlet. A cord for charging is included and stores in a tray on the truck, and the weatherproof port on the truck will accept longer extension cords as needed.

Pair with the SlimSavr Pallet

The specially-sized SlimSavr pallet is designed to move effortlessly on conveyors for shrink-wrapping machines, helping improve throughput without modifying equipment. Its narrow form factor pairs perfectly with the compact LPT40 DSD, helping delivery drivers maneuver in tight spaces.

DIAGRAMS

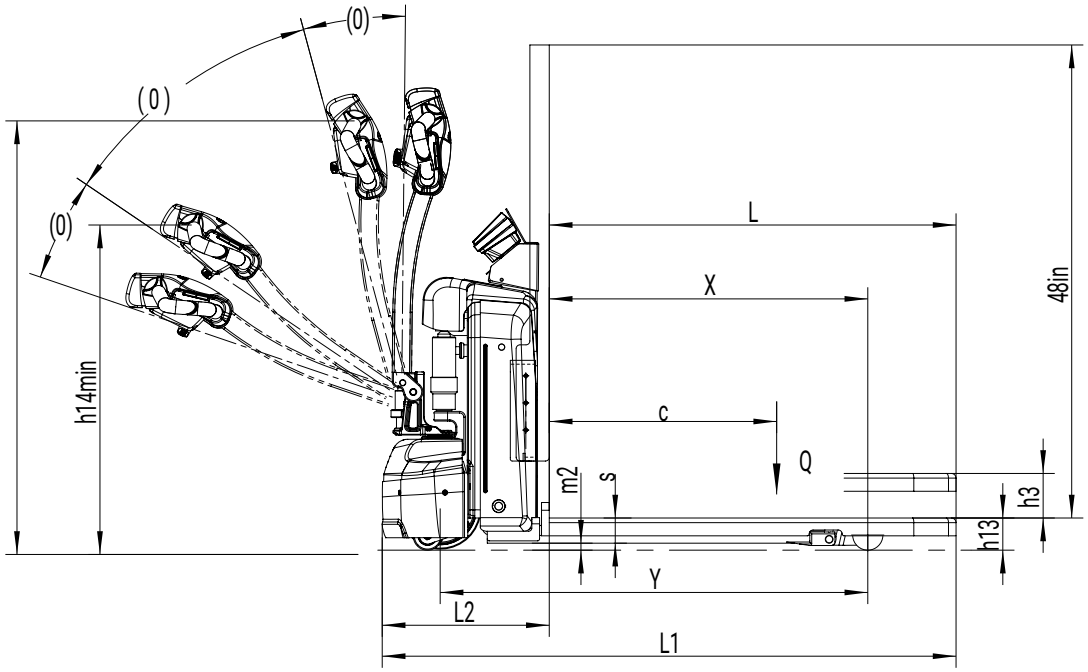

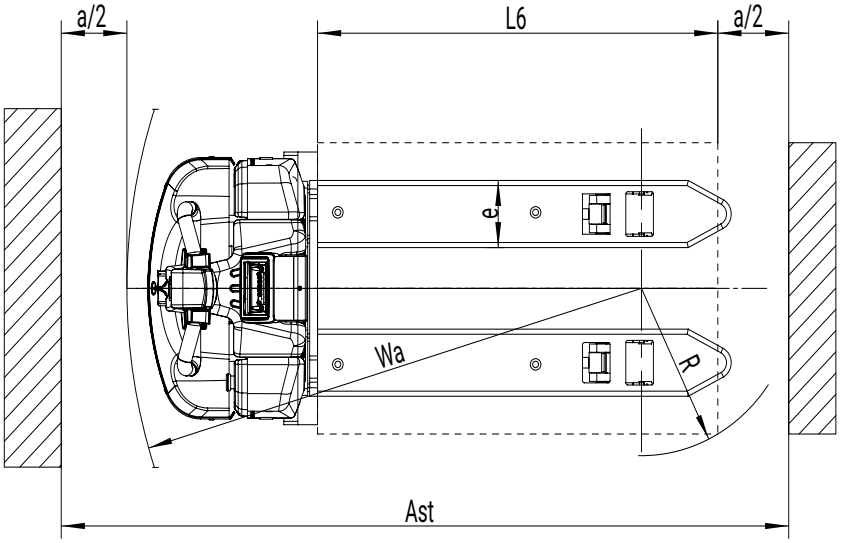

SPECIFICATIONS

Distinguishing mark	1.1	Manufacturer			Big Joe
	1.2	Model designation			LPT40 DSD
	1.3	Drive			Electric
	1.4	Operator type			Pedestrian
	1.5	Load capacity	Q	lb.	4000
	1.6	Load center distance	c	in.	24
	1.8	Load distance, center of drive axle to fork	x	in.	32.4
	1.9	Wheelbase	y	in.	43.5
Service weight	2.1	Service weight		lb.	507
	2.2	Axle loading, laden (front / rear)		lb.	1447 / 2999
	2.3	Axle loading, unladen (front / rear)		lb.	353 / 154
Tires/chassis	3.1	Tire type			Polyurethane
	3.2	Tire size, front		in.	8.3x2.8
	3.3	Tire size, rear		in.	2.9x3.5
	3.4	Additional wheels (caster wheels)		in.	2.9x1.1
	3.5	Wheels, number (front/rear) x=drive wheels			1x / 2
	3.7.1	Tread width, rear	b11	in.	13.8
Dimensions	4.4	Lift stroke	h3	in.	4.5
	4.9	Height of tiller handle in drive position MIN / MAX	h14	in.	25.6 / 46.1
	4.15	Lowered height	h13	in.	3.3
	4.19	Overall length	l1	in.	58.3
	4.20	Length to face of forks	l2	in.	15.7
	4.21	Overall width	b1/b2	in.	24
	4.22	Fork dimensions	s x e x l	in.	1.97 x 6.22 x 41.33
	4.25	Fork spread	b_s	in.	20
	4.32	Ground clearance, center of wheelbase	m2	in.	0.7
	4.35	Turning radius	Wa	in.	51.4
Performance Data	5.1	Travel speed, laden/unladen		mph	3.1 / 3.4
	5.2	Lifting speed, laden/unladen		fpm	3.9 / 4.9
	5.3	Lowering speed, laden/unladen		fpm	12.8 / 6.0
	5.8	Max gradeability, laden/unladen		%	6 / 16
	5.10	Service brake			Electromagnetic
Electric	6.1	Drive motor rating S2 60min		kW	0.9
	6.2	Lift motor rating at S3 15%		kW	0.8
	6.4	Battery voltage / nominal capacity		V/Ah	48 / 30
Additional	10.5	Steering system			Mechanical
	15.1	Charger output current		A	15

STANDARD/OPTIONAL EQUIPMENT

● Standard
○ Optional

Electrical System	48V electrical system with Curtis travel control	●
	Powered forward/reverse travel, lift and lower	●
	Ergonomic control head with key switch, battery discharge indicator and horn	●
	Auto reversing switch	●
	Toggle on/off turtle mode (maneuver with control head in up position)	●
	Bluetooth connectivity for service access	●
Battery and Charging	1.44kWh (48V / 30Ah) Lithium-ion battery	●
	Onboard 120V, 720W (15A) battery charger	●
Drive system / chassis	IP47-rated control head for use in refrigerated environments	●
	Brushless permanent magnet DC drive motor	●
	Integrated weigh scale with display	●
	Heavy duty tapered forks	●
	41 in. long / 20 in. outside width fork configuration	●
	Stability casters	●
	48 in. load backrest with integrated storage tray	●
	Load securement strap	●
	Electronic parking brake with tool-less manual override	●

Wheels and tires	8.3 in. x 2.8 in. polyurethane grooved traction drive tire	●
	2.9 in. x 3.5 in. polyurethane load wheels	●
Warranty	24 months / 1,000 hours powertrain warranty	●
	1 year full truck parts warranty	●
	6 months full truck parts and labor warranty	●

Established in 1951, Big Joe is a customer-driven North American material handling equipment company. We distribute innovative products for in-between-handling applications, purpose-built counterbalanced lithium forklifts, and market-leading autonomous solutions. Based in Madison, Wisconsin, we provide engineering expertise, customer service, aftermarket parts, and warranty support to our extensive dealer network and customers.

Certification: Big Joe lift trucks are built in compliance with ANSI B56.1 and OSHA section 1910.178(A)(2). Lift truck specifications are subject to change without notice. Any specifications critical to the intended application of the forklift should be reviewed with your Big Joe dealer. Images may show optional equipment not available in all regions.

BIG JOE

630-916-2600
sales@bigjoeforklifts.com
bigjoeforklifts.com

2026-01_23_V01